SOP-14/TSSOP-14

SOP-8/MSOP-8

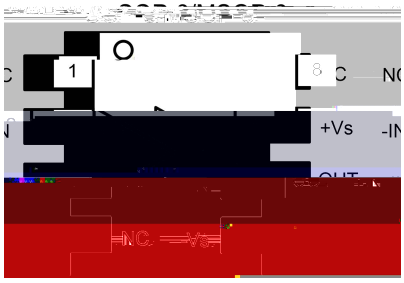

COS1177 COS2177 COS4177

+Vs	Positive power supply	A bypass capacitor of 0.1μF as close to the part as possible

($+V_S$=+15V, $-V_S$=-15V, T_A=+25°C, R_L=10kΩ to V_S/2, unless otherwise noted)

Input Offset Voltage	V_{OS}	COS1177SR, 1177MR, COS2177SR, 2177MR/U	±15	±50	μV
		COS2177SR/UA, COS2177MR/UA, COS4177	±25	±125	μV
Input Offset Voltage Drift	$\Delta V_{OS}/\Delta T$	-40 to 125°C	0.2	0.7	μV/°C
Input Bias Current	I_B		±0.5	±7	

Driving large capacitive loads can cause stability problems for voltage feedback op amps. As the load capacitance increases, the feedback loop's phase margin decreases, and the closed loop bandwidth is reduced. This produces gain peaking in the frequency response, with overshoot and ringing in the step response. A unity gain buffer (G = +1) is the most sensitive to capacitive loads, but all gains show the same general behavior.

When driving large capacitive loads with these op amps (e.g., > 100 pF when G = +1), a small series resistor at the output (R_{ISO} in Figure 1) improves the feedback loop's phase margin (stability) by making the output load resistive at higher frequencies. It does not, however, improve the bandwidth.

To select R_{ISO}, check the frequency response peaking (or step response overshoot) on the bench. If the response is reasonable, you do not need R_{ISO}. Otherwise, start R_{ISO} at 1 kΩ and modify its value until the response is reasonable.

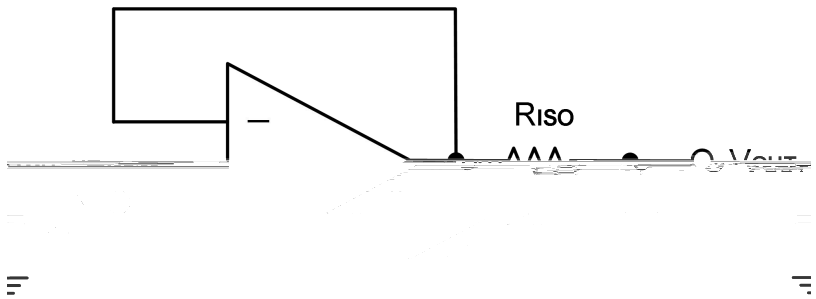

Figure 1. Indirectly Driving Heavy Capacitive Load

An improvement circuit is shown in Figure 2. It provides DC accuracy as well as AC stability. R_F provides the DC accuracy by connecting the inverting signal with the output, C_F and R_{ISO} serve to counteract the loss of phase margin by feeding the high frequency component of the output signal back to the amplifier's inverting input, thereby preserving phase margin in the overall feedback loop.

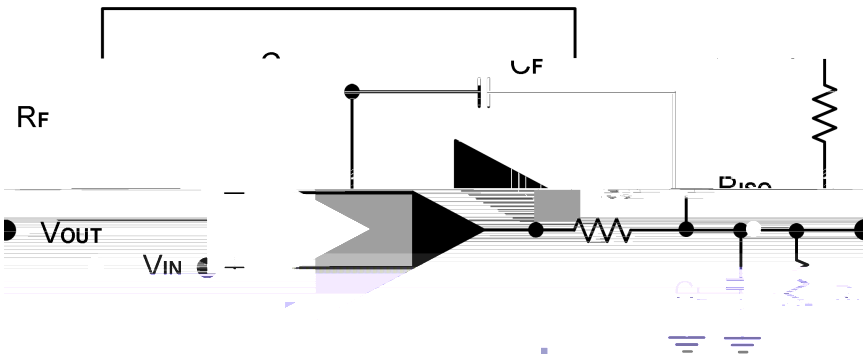

Figure 2. Indirectly Driving Heavy Capacitive Load with DC Accuracy

For the inverting configuration, there are two others ways to increase the phase margin: (a) by increasing the amplifier's gain or (b) by placing a capacitor in parallel with the feedback resistor to counteract the parasitic capacitance associated with inverting node, as shown in Figure 3.



Figure 3. Adding a Feedback Capacitor in the Inverting Configuration

The COSx177 operates from a single +5V to +36V supply or dual ±2.5V to ±18V supplies. For single-supply operation, bypass the power supply +Vs with a 0.1μF ceramic capacitor which should be placed close to the +Vs pin. For dual-supply operation, both the +Vs and the -Vs supplies should be bypassed to ground with separate 0.1μF ceramic capacitors. 2.2μF tantalum capacitor can be added for better performance.

The length of the current path is directly proportional to the magnitude of parasitic inductances and thus the high frequency impedance of the path. High speed currents in an inductive ground return create an unwanted voltage noise. Broad ground plane areas will reduce the parasitic inductance. Thus a ground plane layer is important for high speed circuit design.

The circuit shown in Figure 4 performs the differential function. If the resistors ratios are equal (R_4 / R_3 = R_2 / R_1), then V_{OUT} = (V_{IP} – V_{IN}) × R_2 / R_1 + V_{REF}.

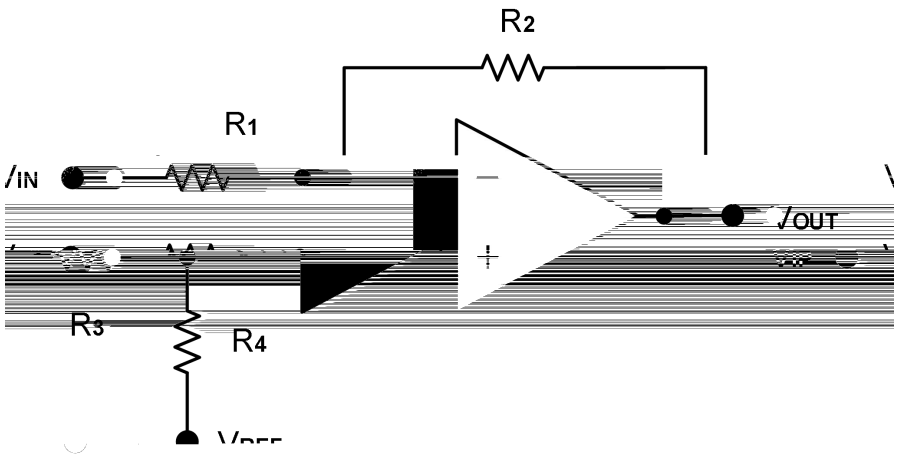

Figure 4. Differential Amplifier

When receiving low-level signals, limiting the bandwidth of the incoming signals into the system is often required. The simplest way to establish this limited bandwidth is to place an RC filter at the noninverting terminal of the amplifier. If even more attenuation is needed, a multiple pole filter is required. The Sallen-Key filter can be used for this task, as Figure 5. For best results, the amplifier should have a bandwidth that is 8 to 10 times the filter frequency bandwidth. Failure to follow this guideline can result in reduction of phase margin. The large values of feedback resistors can couple with parasitic capacitance and cause undesired effects such as ringing or oscillation in high-speed amplifiers. Keep resistors value as low as possible and consistent with output loading consideration.

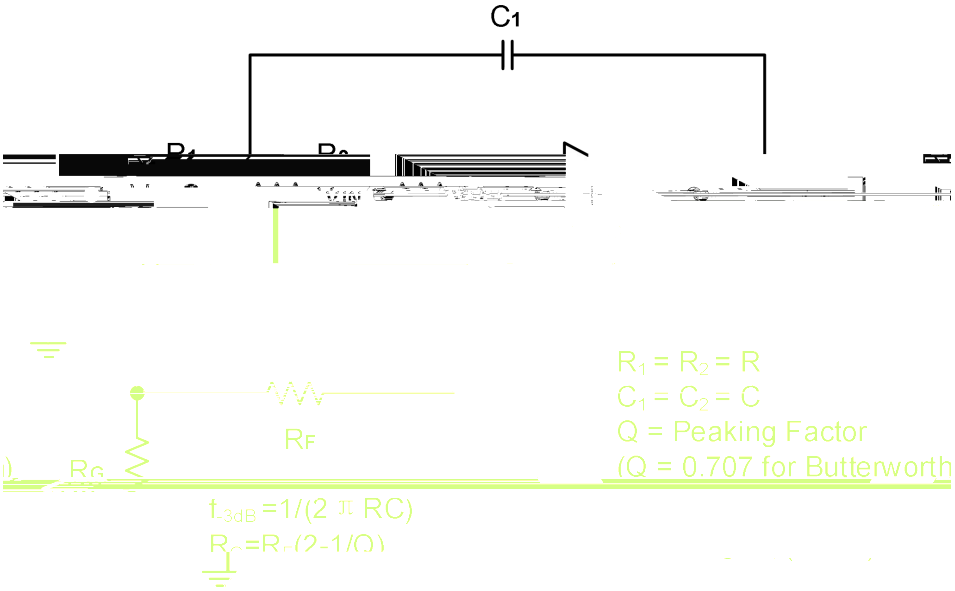

Figure 5. Two-Pole Low-Pass Sallen-Key Active Filter

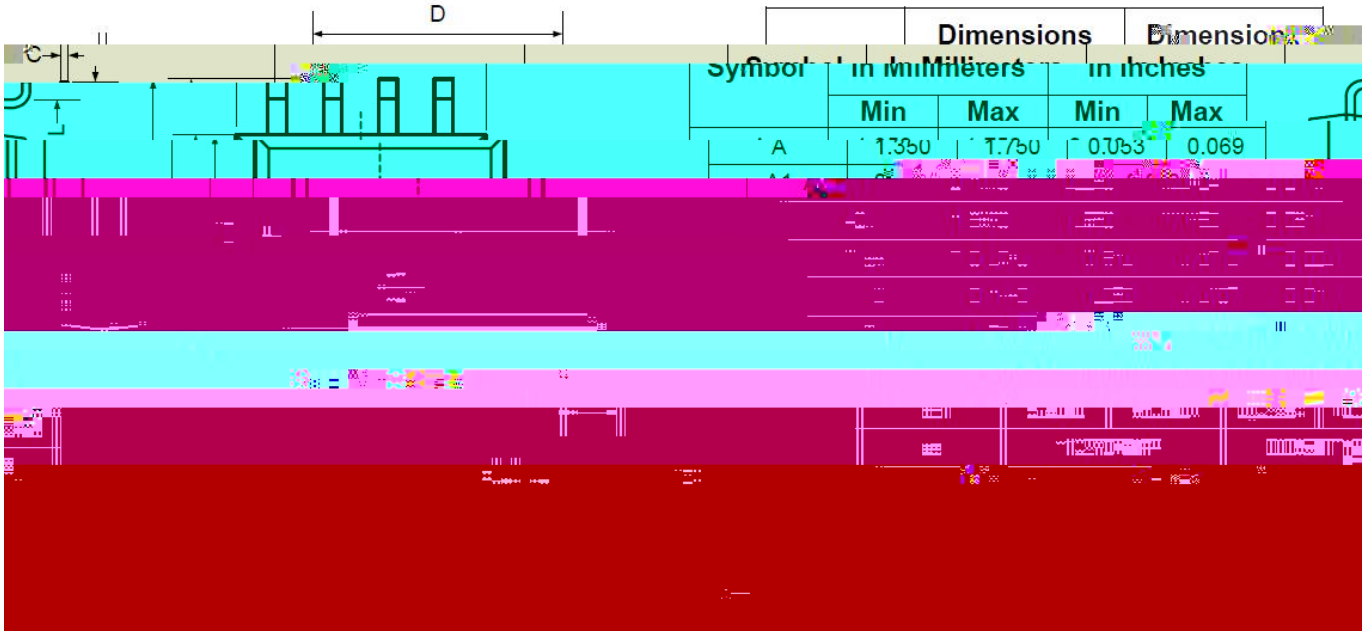

Symbol	Dimensions In Millimeters		Dimensions In Inches	
	Min	Max	Min	Max
A	1.350	1.750	0.053	0.069

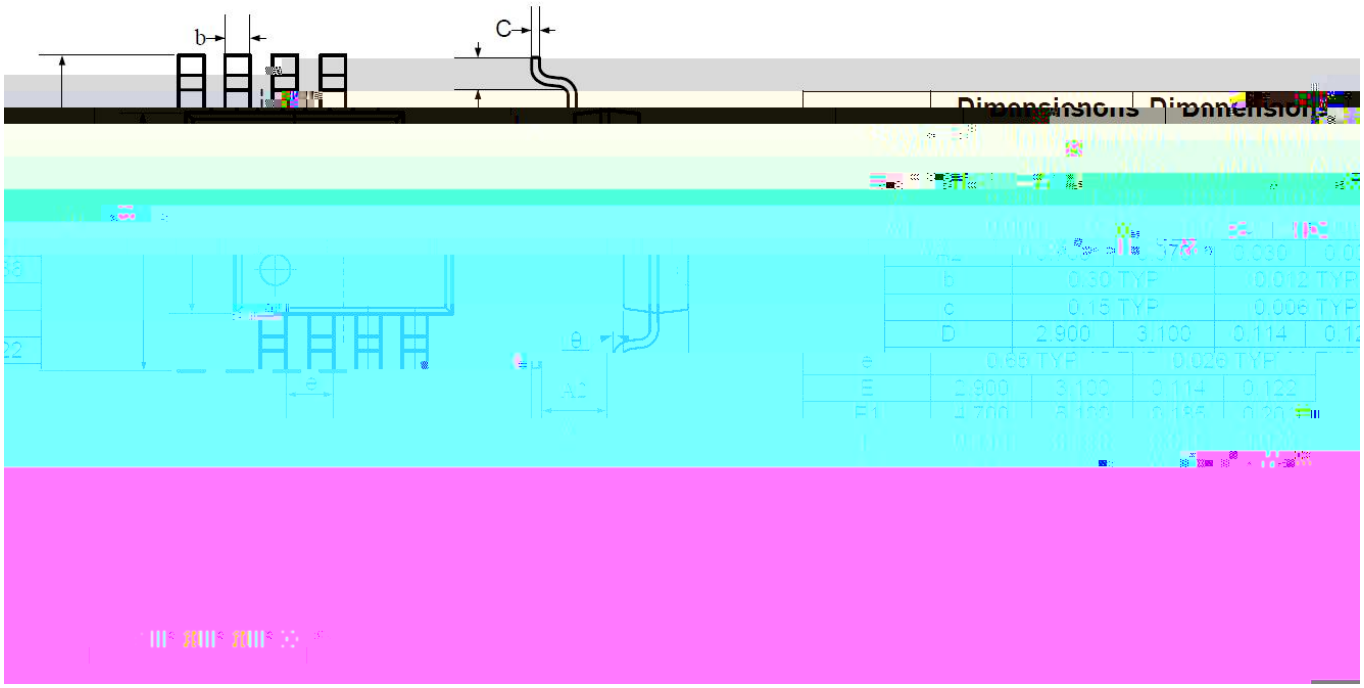

Dimensions	Dimensions		
b	0.30 TYP		0.012 TYP
c	0.15 TYP		0.006 TYP
D	2.900	3.100	0.114
e	0.65 TYP		0.026 TYP
E	2.900	3.100	0.114
E1	1.700	1.900	0.067

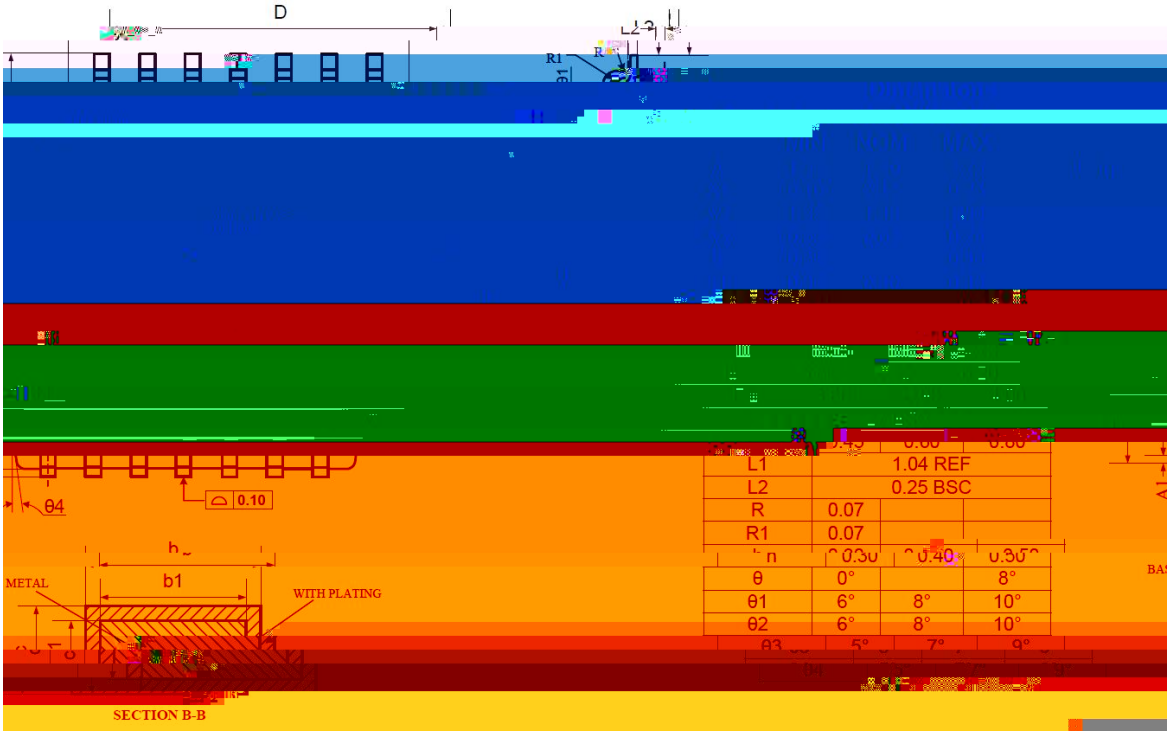
D
R1
θ4
0.10
METAL
b1
WITH PLATING
SECTION B-B
L1 1.04 REF
L2 0.25 BSC
R 0.07
R1 0.07
θ 0° 8°
θ1 6° 8° 10°
θ2 6° 8° 10°

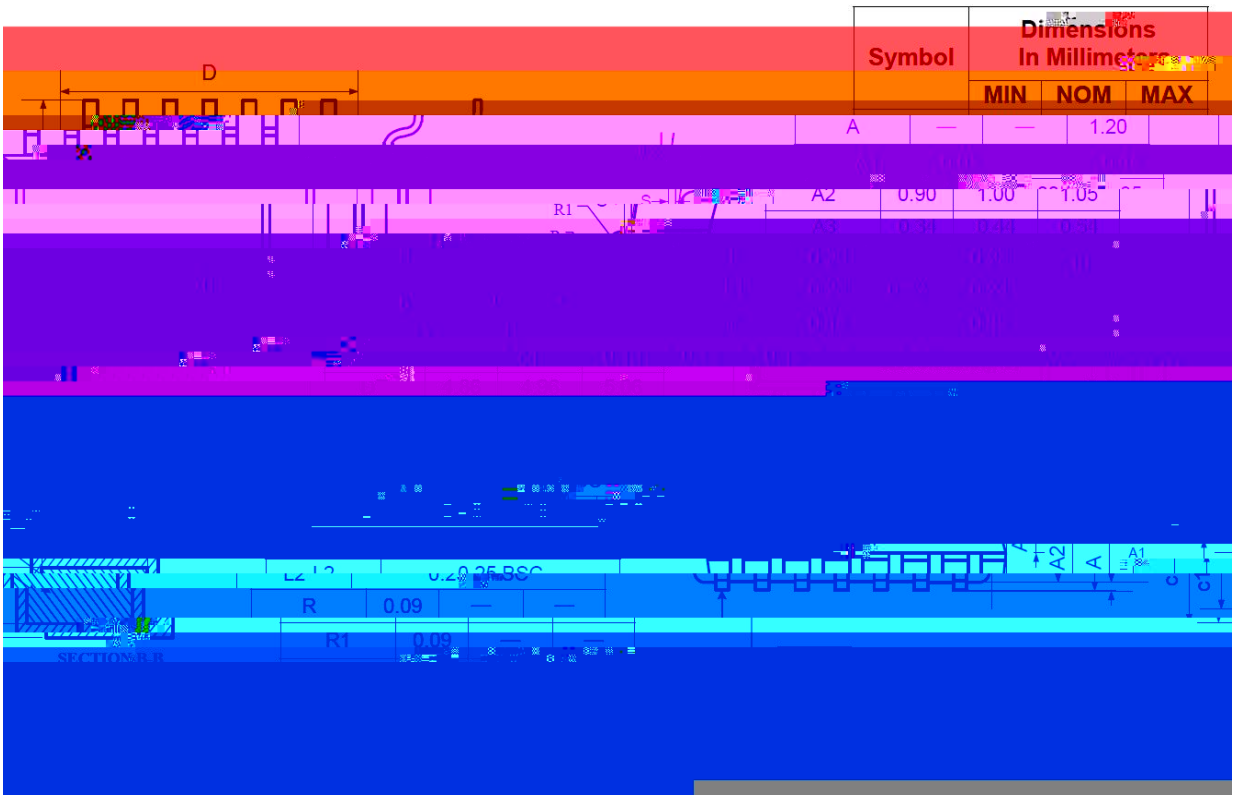
Symbol
Dimensions In Millimeters
MIN NOM MAX
D
R1
A — — 1.20
A2 0.90 1.00 1.05
R 0.09 — —
R1 0.09 — —